HARDMETALS

SUBSIDIARY OF HARD METALS AUSTRALIA

WOMBAT

US AND OTHER PATENTS APPLY

HIGH PERFORMANCE
PDC HOLE OPENERS
AND EQUIPMENT

PERFORMANCE GUARANTEED

HARDMETALS CANADA INC.
Unit 6, 9550 114th Avenue SE Calgary AB, CA T3S-0A5
Cell: +1 (403) 615 6163, Ph: +1 (403) 523 9232
ervin@hardmetals.com
www.hardmetals.com

HARD METALS AUSTRALIA PTY LIMITED
40 Peter Brock Drive, Eastern Creek, NSW, 2766
Ph: +61 (0)2 9009 4455, Fax: +61 (0)2 9009 4456
sales@hardmetals.com
www.hardmetals.com

WOMBAT

It's in the Detail

Standard Body Types

Product Code	Item Description
RB1.S4	Wombat Reamer Body 2 3/8" IF D=10"-16"
RB2.S4	Wombat Reamer Body 2 3/8" IF D=16"-22"
RC1.S4	Wombat Reamer Body 2 7/8" IF D=10"-16"
RC2.S4	Wombat Reamer Body 2 7/8" IF D=16"-22"
RD1.S4	Wombat Reamer Body 3 1/2" IF D=12"-24"
RD2.S4	Wombat Reamer Body 3 1/2" IF D=18"-30"
RE1.S4	Wombat Reamer Body 4 1/2" IF D=12"-30"
RE2.S4	Wombat Reamer Body 4 1/2" IF D=16"-36"
RF1.S4	Wombat Reamer Body 6 5/8" FH D=16"-28"
RF2.S4	Wombat Reamer Body 6 5/8" FH D=24"-42"
RF3.S4	Wombat Reamer Body 6 5/8" FH D=36"-60"
Other sizes available by request.	

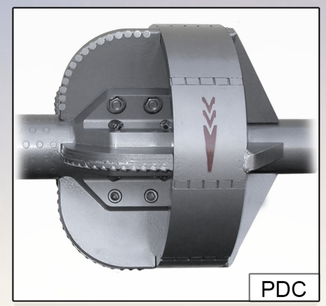
PDC

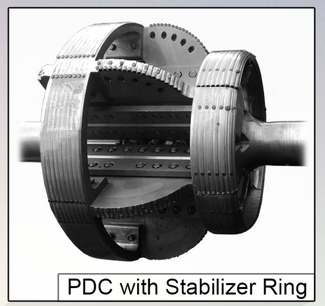
PDC with Stabilizer Ring

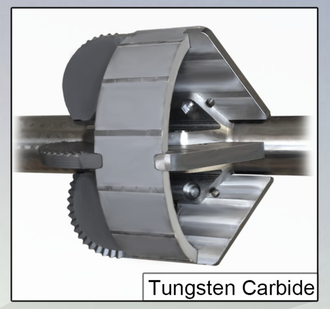
Tungsten Carbide

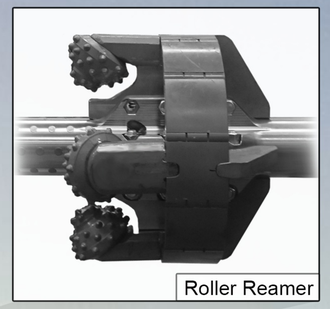
Roller Reamer

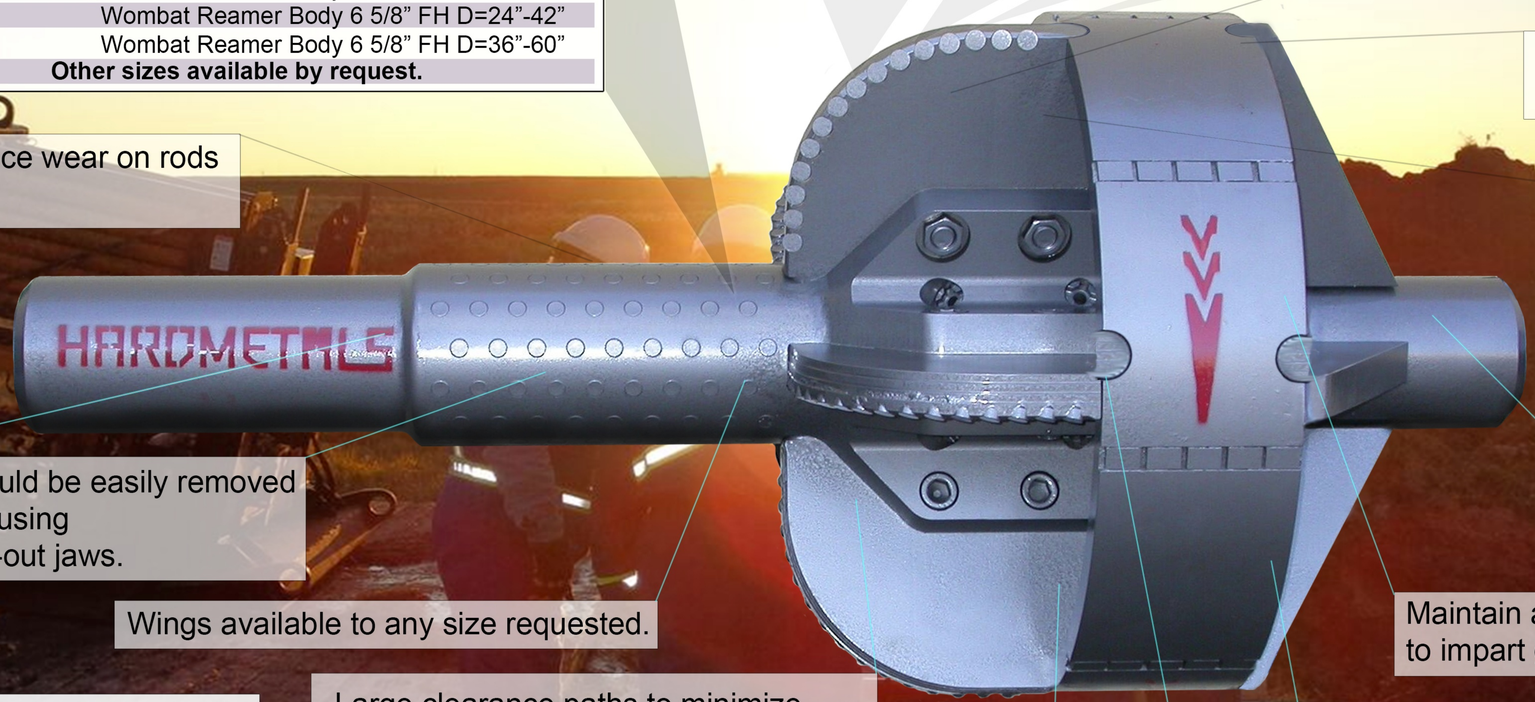

Available with forward and back reaming.

Unique flange to wing locking system for ultimate reliability.

Available with PDC, Carbide or Roller cutter segments for different conditions.

Easy change of hole diameter on the same cutter body.

Maintain a stationary or non rotating stabilizer to impart greater stability to the cutters.

Eliminate uneven rotational movement caused by rod whip.

Deliver full and constant rotational torque directly into the cutters.

Field replaceable cutting segments.

Significantly reduce wear on rods and stabilizers.

Excellent ROP.

A long body that could be easily removed from the drill string using conventional break-out jaws.

Wings available to any size requested.

Large clearance paths to minimize the incidence of clogging at high ROP.

The **Wombat** Hole Opener is a significant step forward in the art of reaming and hole opening. With built in stabilization, the flexibility of simple replacement of cutter type and diameter in the field combined with excellent down the hole performance make this a worthy accessory to any driller's tool box.

HARDMETALS CANADA INC.
Unit 6, 9550 114th Avenue SE Calgary AB, CA T3S-0A5
Cell: +1 (403) 615 6163, Ph: +1 (403) 523 9232
ervin@hardmetals.com
www.hardmetals.com

HARD METALS AUSTRALIA PTY LIMITED
40 Peter Brock Drive, Eastern Creek, NSW, 2766
Ph: +61 (0)2 9009 4455, Fax: +61 (0)2 9009 4456
sales@hardmetals.com
www.hardmetals.com

Stripping & Reassembly - is one of the outstanding features of the reamer. The entire assembly should be completed in under half an hour.

- Step One: Remove fasteners

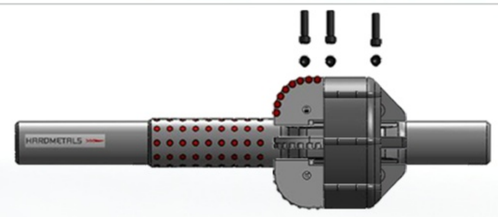

- Step Two : Dislodge back gussets and stabilizer ring.

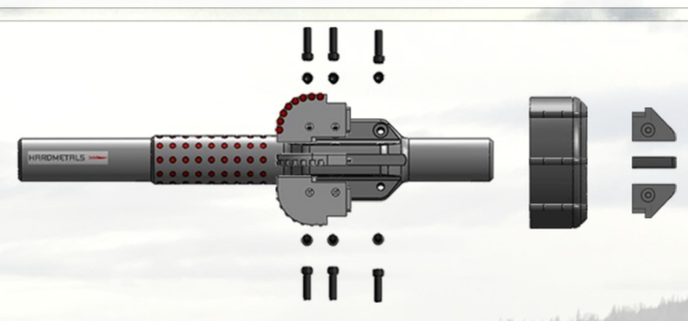

- Step Three : Remove cutters

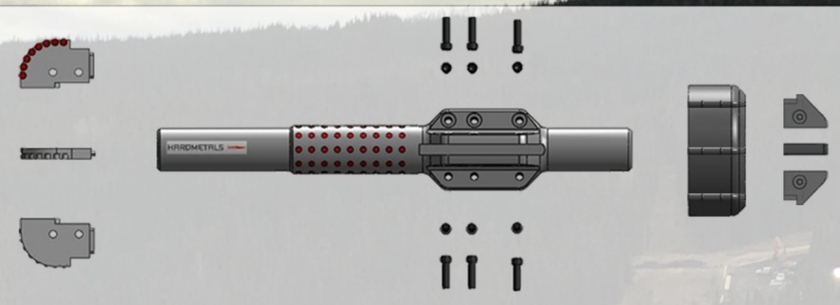

- Step Four: Insert new or different size cutters

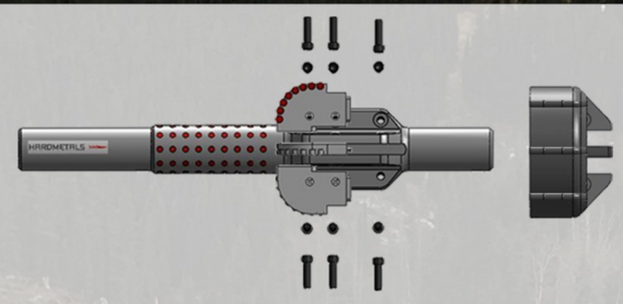

- Step Five : Slide back the stabilizer ring and install back gussets.

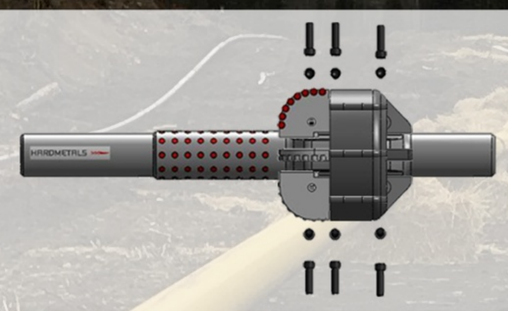

- Step Six : Insert fasteners & Nordlock washers, torque to specifications

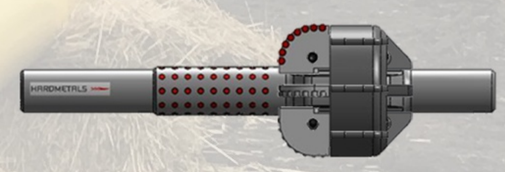

Services include:

- PDC Drill bits
- Construction equipment
- Machining
- Tricones
- Trenching and surface profiling tools
- Special or custom designed wear parts

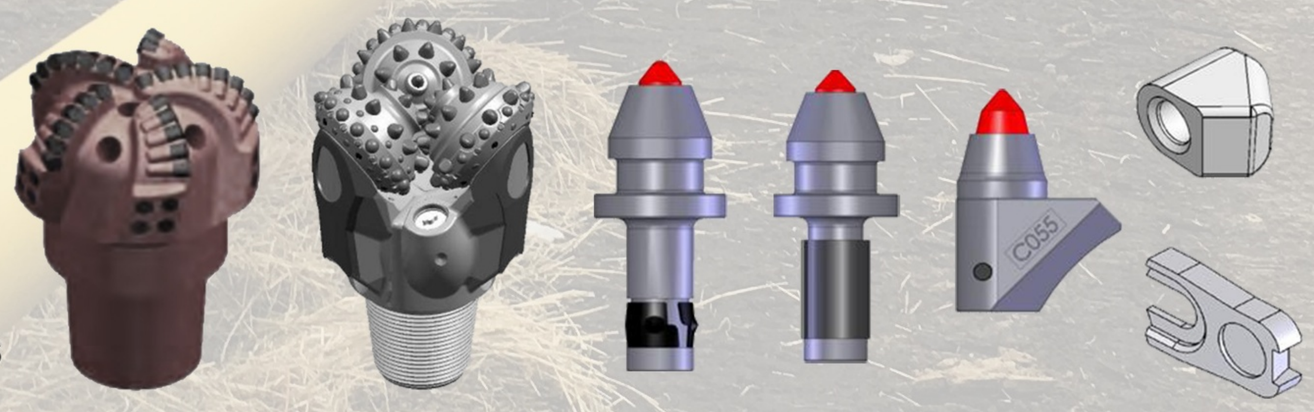

PDC integrated drill bits have been a staple in the drilling industry for many years. Originally very expensive, the manufacturing techniques have been refined and PDC bits are now far more cost effective, often showing significant economic advantages over tricone, regular drag and percussive bits. Available in 3, 4, 5 & 6 blade configuration. These bits feature the latest geometries for efficient flushing and stable drilling in a broad range of strata.

HARDMETALS CANADA INC.
Unit 6, 9550 114th Avenue SE Calgary AB, CA T3S-0A5
Cell: +1 (403) 615 6163, Ph: +1 (403) 523 9232
ervin@hardmetals.com
www.hardmetals.com

HARD METALS AUSTRALIA PTY LIMITED
40 Peter Brock Drive, Eastern Creek, NSW, 2766
Ph: +61 (0)2 9009 4455, Fax: +61 (0)2 9009 4456
sales@hardmetals.com
www.hardmetals.com